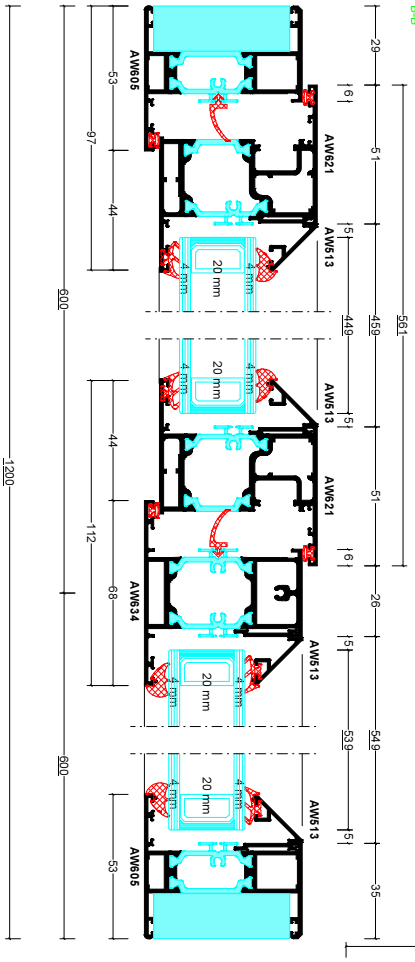
B-B
AW605
AW621
AW513
AW634
20 mm
4 mm
1200
600
53
97
44
112
68
29
6
51
5
449
459
561
26
539
549
35

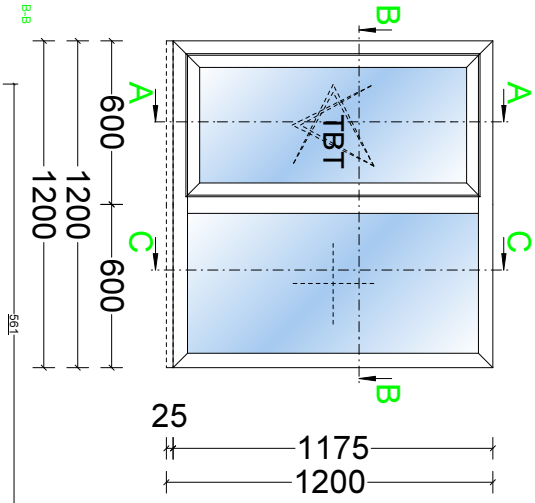
A
B
C
TBT
600
600
1200
1200
25
1175
1200

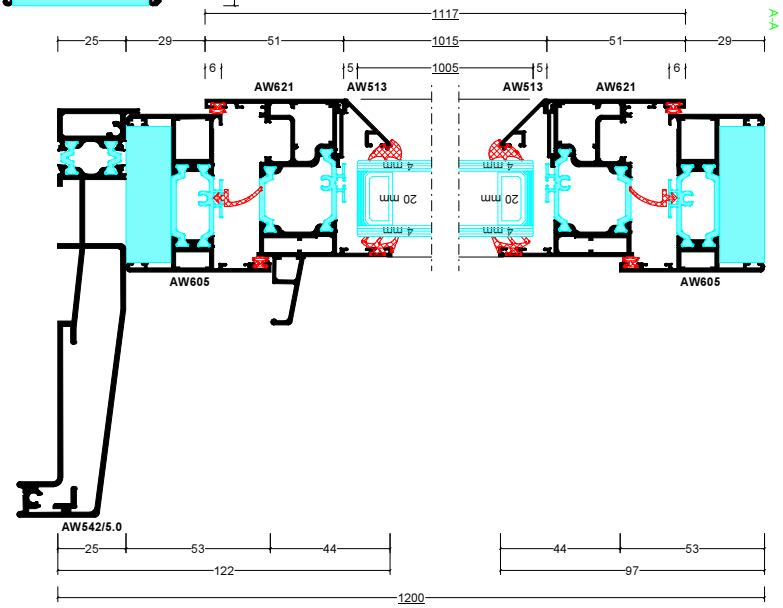
A-A
1117
25
29
51
1015
51
29
6
5
1005
5
6
AW621
AW513
AW513
AW621
20 mm
4 mm
AW605
AW605
AW542/5.0
25
53
44
122
44
53
97
1200

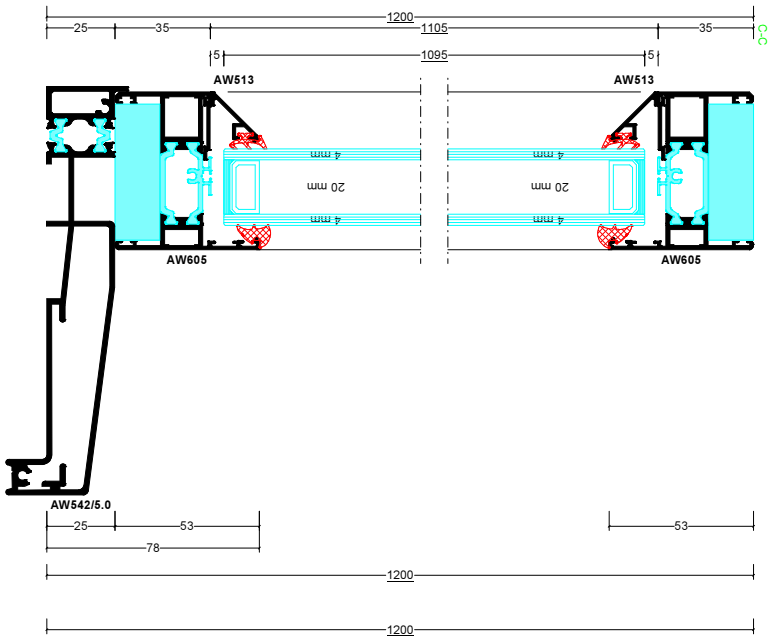
1200
25
35
1105
35
C-C
5
1095
5
AW513
AW513
20 mm
4 mm
AW605
AW605
AW542/5.0
25
53
78
53
1200
1200